UNV4720N

IPC3614SB-ADF28KM-IO

4MP Deep learning IR Fixed Dome Network Camera

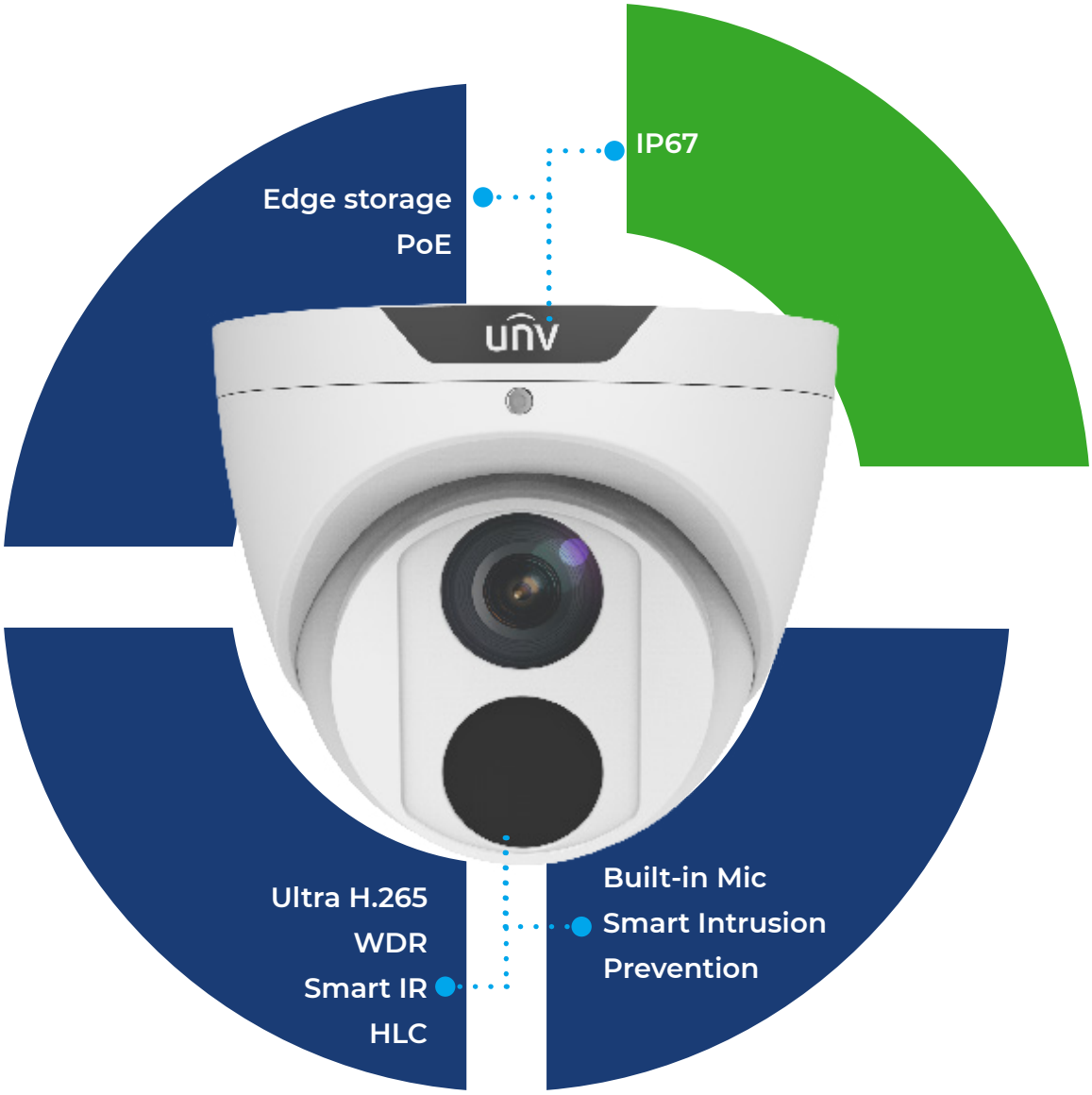

versienr. 1.0

security

by nestor company

Focus on **expertise**, supplier of **security**

Meer weten over ons compleet assortiment?
Contacteer uw vertegenwoordiger of bezoek ons kenniscentrum.

nestor company
E3-laan 93 9800 Deinze - Tel. 32 (0)9 380 40 20
sales@nestorcompany.be - www.nestorcompany.be

specificaties

CAMERA					
Sensor	1/3" , 4.0 megapixel, progressieve scan, Cmos				
Lens	2.8mm@F1.6			4.0mm@F1.6	
Gezichtshoek	H: 101.1°		V: 55.3°		O: 111.1°
Dori distance	Lens (mm)	Detectie (m)	Observeer (m)	Herkenning (m)	Indentificatie (m)
	2.8	63.0	25.2	12.6	6.3
	4.0	90.0	36.0	18.0	9.0
Hoekverstelling	Pan: 0° ~ 360°		Tilt: 0° ~ 80°		Draai: 0° ~ 360°
Minimum verlichting	Kleur: 0,003Lux (F1,6 - AGC on)			0 Lux met IR	
S/N	>56dB				
WDR	120dB				
IR bereik	tot 30m bereik				
IR On/off control	auto/manueel				
Shutter	auto/manueel , 1 ~ 1/100000s				
Dag/Nacht	IR-cut filter met auto switch (ICR				
Video compressie	Ultra 265 , H.265 , H.264 , MJPEG				
H.264 profiel code	Baseline profile , Main profile, High profile				
Frame rate	Main stream: 2MP (1920*1080), Max 30fps; 720P (1280*720), max 30fps Sub Stream: 720P (1280*720), Max 30fps; D1 (720*576), Max 30fps; 640*360,Max 30fps; 2CIF(704*288), Max 30fps; CIF(352*288), Max 30fps; Third Stream: D1 (720*576), Max 30fps; 640*360,Max 30fps; 2CIF(704*288), Max 30fps; CIF(352*288),				
Video bit rate	128 Kbps ~ 16Mbps				
OSD / ROI	tot 8 areas				
Privacy mask Motion Detectie	tot 4 areas				
Smart IR / Flip / Dewarping / HLC / BLC / Defog	ondersteund				
NETWERK					
Protocols	IPv4, IGMP, ICMP, ARP, UDP, DHCP, PPPoE, RTP, TRSP, RTCP, DNS, DDNS, NTP, FTP, UPnp, HTTP, HTTPS, SMTP, 802.1x, SNMP, QoS				
Compactibele integratie	ONVIF (Profile S, Profile G, Profile T), API				
Netwerk	1 RJ45 10M/100M Base-Tx Ethernet				
Edge storage	Micro SD, tot 256 GB				
Network storage	ANR, NAS (NFS)				
Smart Intrusion Prevention	Cross line, intrusion, enter area, leave area detectie				
ALGEMEEN					
Voeding	DC 12V±25%, PoE (IEEE 802.3af) ; verbruik: max 4W				
Afmeting (Ø x H)	Ø 110.5 x 94.1mm (Ø4.4" x 3.7")				
Netto gewicht	0.425kg (0.93lbs)				
Werkingsomgeving	-30°C ~ 60°C (-22°F ~ 140°F, vochtigheid <95%RH (niet condenserend)				
Audi I/O & Compressie	1/1, G711				
Veiligheid	Overspanning: 2KV		IP67		
Certificaten	CE: EN 60950-1		UL: UL60950-1		FCC: FCC Part 15

afmetingen

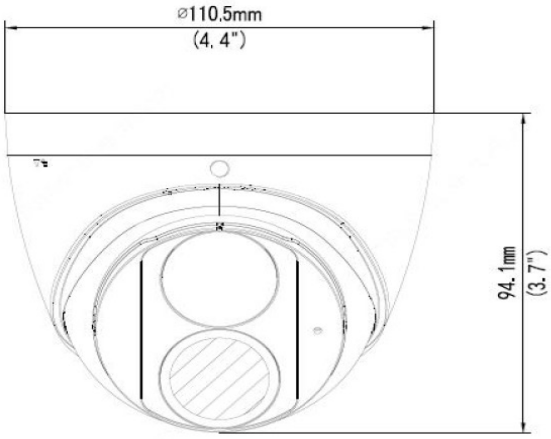

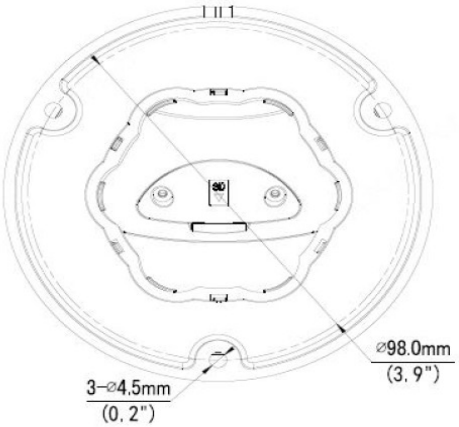

accessoires

UNVA008	GPAU001	UNVA009	UNVA016
Back box bullet	Pole mount	Wall mount Mini Dome	Wall mount eyeball





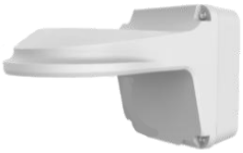

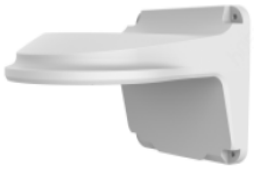

UNVA015	UNVA600
NPT ¾"Plastic Waterproof joint	Wegde for mini dome



