Consoles and control units

EV 430 PROX

RSC | CODES | RFID READER | COLOR DISPLAY 4.3" | CAPACITIVE TOUCH SCREEN | VOICE SYNTHESIS | 6 PROGRAMS MANAGED | SECURITY GRADE 2 | CLASS II GENERAL INDOOR

Console with TFT 4.3" capacitive touch screen and integrated RFID reader - RS485 connection - Signal LED and acoustic signaling device - Interactive and intuitive graphic interface with icons contextual to system status - Help function - Free program association - Graphic themes programmable by the user - Integrated RSC® technology: remote programming and management - Anti-tamper protection: anti-opening/antidetachment, code error, serial bus sabotage - Surface mounting - Environmental class II (indoor general) - Ultra-thin ASA casing

Item no. F127EV430PROX (white) - Please refer to the Sales Department

Item no. F127EV430PROXG (gray) - Please refer to the Sales Department

EV 430 PROX - Technical and functional specifications

General features	Type	**EV 430 PROX**
	RFID reader	**Integrated**
	Connection	**RS485 Serial Bus**
User interface	Display	**TFT 4.3" colors**
	Resolution	**480 x 272px**
	Touch screen	**Capacitive**
	Infographics	**Icons contextual to system status**
	Voice synthesis	✓
	Speaker	✓
	Buzzer signals	✓
	Programs managed	**6**
	Remote controls managed	**6**
	Thermostats management	✓

Anti-tamper protection	Anti-opening/anti-detachment	**Micro-switch**
	Serial bus sabotage	**Electronic**
	Code error	**Electronic**
Electrical specifications	Operating voltage	**10.5...14V DC**
	Stand-by consumption	**50mA @ 13.8V DC**
	Max. consumption	**130mA @ 13.8V DC**
Physical specifications	Environmental class	**II**
	Protection class	**IP4x-IK04**
	Casing	**ASA**
	Dimensions (L x H x D)	**154 x 104.6 x 23mm**
	Weight	**230g**
Conformity	Standards	**EN 50131-1 EN 50131-3**
	Security grade	**2**
	Notified body	**Pending**

EV 430 PROX - ACCESSORIES

EV KEY

High security transponder for the Evolution series RFID readers - Unique non-duplicable nor reprogrammable code - ABS casing - Design by Pininfarina - Gray

Item no. F103EVKEY

PROGRAMMING - UTS 430 PROX

Zones	Zones - Functions	Zones - Programs	Zones - Options	**Consoles**	Options	Outputs

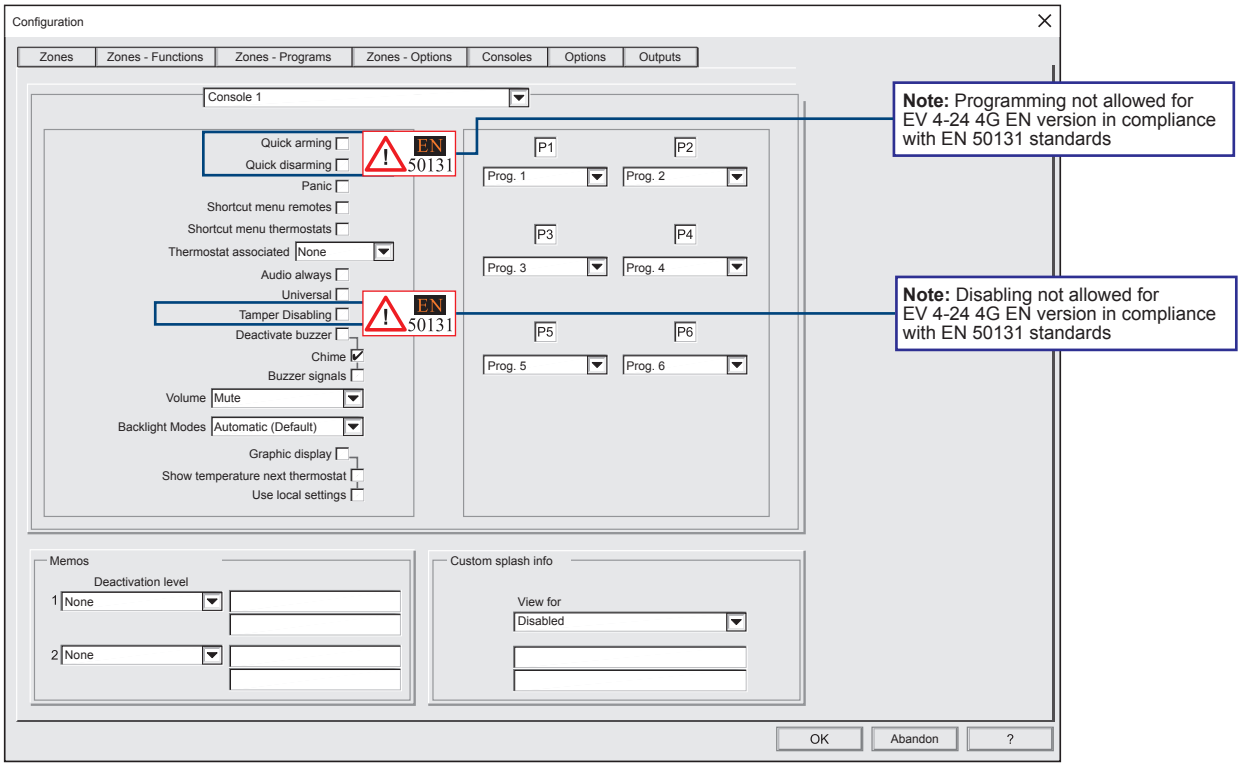

Console 1

1 - Console selection

Click on the drop-down menu, and choose the identifier of the console you want to program.

EN 50131 Quick arming ☐

Note: Programming not allowed for EV 4-24 4G EN version in compliance with EN 50131 standards

2 - Quick arming

Enabling the quick arming function.
Method: press the “Program number (P1... P6)” + “YES button”.

EN 50131 Quick disarming ☐

Note: Programming not allowed for EV 4-24 4G EN version in compliance with EN 50131 standards

3 - Quick disarming

Enabling the quick disarming function.
Method: press the “Program number (P1... P6)” + “YES button”.

Panic ☐

4 - Panic

Enables the console for panic alarm generation.
According to the implementation methods provided by the console.

Shortcut menu remotes ☐

5 - Shortcut menu remotes

If enabled, it allows the activation/deactivation of the remote controls, without the need to enter the code.

Shortcut menu thermostats ☐

6 - Shortcut menu thermostats

If enabled, the user can modify the intervention threshold of the thermostats, without typing the code.

Thermostat associated None

7 - Thermostat associated

The drop-down menu allows you to select the associated thermostat (displayed on the keyboard).

Audio always ☐

8 - Audio always

Enables the console to always play messages and sound effects, even for operations performed on other consoles.

Universal ☐

9 - Universal

Enables the console to arm and disarm all programs associated with the code, even if the program is not displayed by the LEDs.
In this case the arming/disarming is shown on the display.

EN 50131

Tamper Disabling ☐

Note: Disabling not allowed for EV 4-24 4G EN version in compliance with EN 50131 standards

10 - Tamper Disabling

Deactivates the 24H tamper protection of the console.

Deactivate buzzer ☐
Chime ☐
Buzzer signals ☐

11 - Deactivate buzzer

Deactivates the Buzzer operation.
Note: it also deactivates the sound linked to button pressing.

Chime - Enables/disables the console as a signalling device for the Chime function.

Buzzer signals - Enables/disables the keypad buzzer when signaling events: Exit time, Entry time, Alarm time, Partialization end warning, Auto-arming warning. General enabling for reporting these events must be activated in the Options menu.

Volume MUTE

12 - Volume

Programming the volume for playing voice messages.

Backlight Modes Automatic (Default)

13 - Backlight Modes

Operating mode of the display backlight.

Automatic (Default)	Switching on and light intensity automatically adjusted according to the ambient light
Always on	Always on, with favourable ambient light, light intensity and consumption reduced to a minimum
Always off	Backlight always off (deactivated)
Manual	With unfavourable ambient light, typing a button activates the backlight for two minutes
Manual always on	Always on with minimum light intensity, pressing a button activates the backlight for two minutes

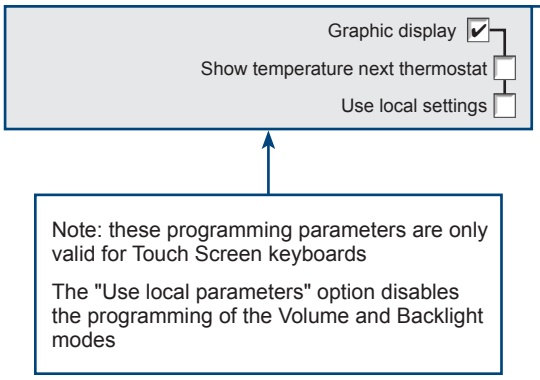

14 - Graphic display

Warning: the “Graphic display” option must be enabled for all Touch screen keyboards.

Show temperature next thermostat
Normally the keyboard displays the temperature of the associated thermostat.
With this option enabled, the keyboard also displays the temperature detected by the thermostat that has not been associated with the keyboard.

Use local settings
With this option enabled, the user can operate on the keyboard to adjust or modify some operating parameters:
- Adjust the sound diffusion volume
- Adjust the backlight mode and level
- Change the settings of the screen saver function

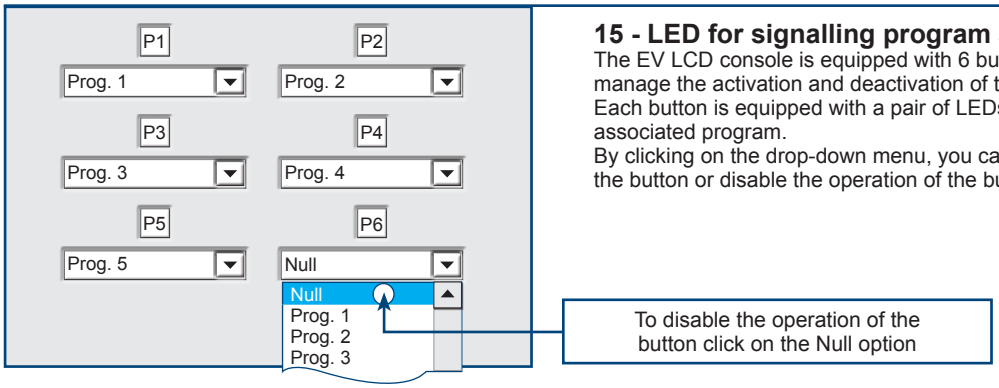

15 - LED for signalling program status

The EV LCD console is equipped with 6 buttons with which it is possible to directly manage the activation and deactivation of the respective operating programs.
Each button is equipped with a pair of LEDs that display the operating status of the associated program.
By clicking on the drop-down menu, you can change the program associated with the button or disable the operation of the button by clicking on the Null option.

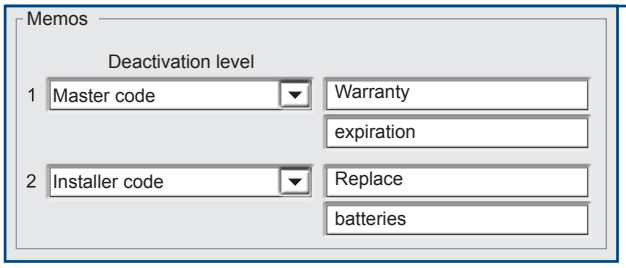

16 - Memos

It is possible to program 2 messages consisting of two lines of 16 characters. The messages will be displayed by all the consoles on the date scheduled on the control panel calendar, messages can be viewed several times during the year.
To program the display date, see the paragraphs “Customisation year 1... 2” and “Cyclic timers”.
Deactivation priority. The displayed message will be deleted only by recognition of the code specified in the “Deactivation level” field.

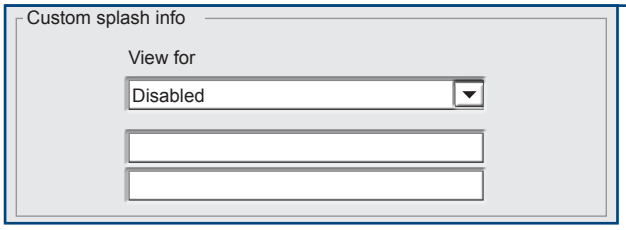

17 - Custom splash info

The console can display a message consisting of two lines for a total of 40 characters at the user’s request.
The display of the message can be disabled.
To view the message you need to press the MEM button.
The display time is programmable.

The Consoles menu has been completed, press:
OK to confirm and quit
Abandon to quit without saving

1 - INSTALLATION

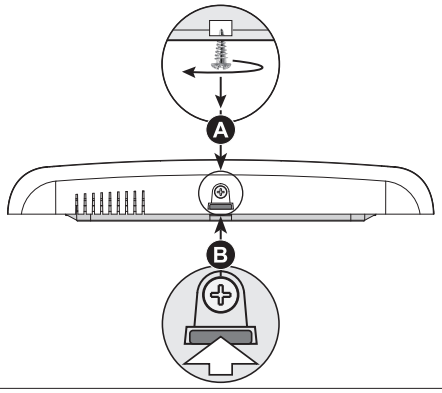

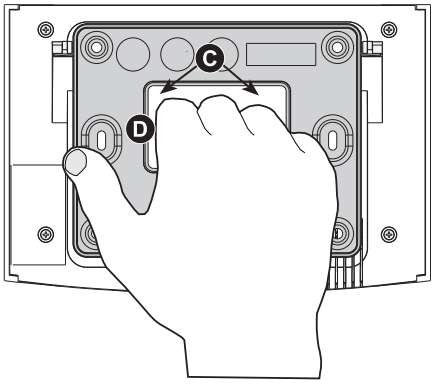

A	Unscrew the screw that connects the panel to the frame	C	Put your fingers inside the window in the middle of the frame
B	Push the locking hook to release the frame	D	Hold the frame and lift your fingers to release it

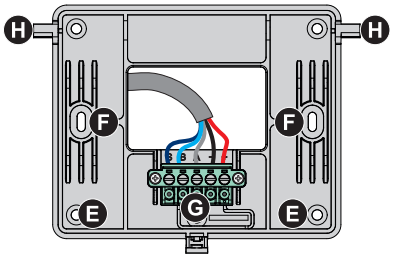

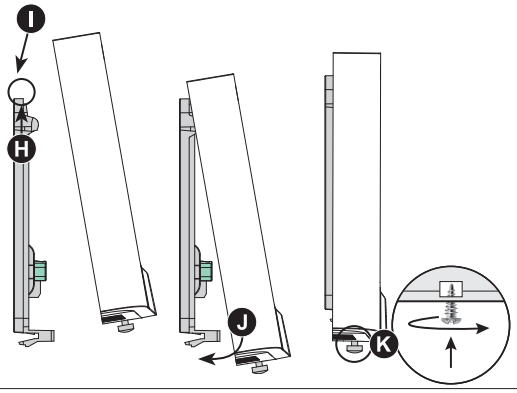

E	Fixing holes for dowels	I	Fasten the panel onto the frame pins
F	Fixing slots for recessed box 503	J	Rotate and push the panel towards the frame
G	Connect the cable to the terminal block	K	Screw in the locking screw
H	Panel coupling pins		

2 - CONNECTION

Connection - The console must be connected in series to the RS485 Serial Bus of the control unit using a cable of appropriate cross section. When evaluating the cable cross section, it is essential to take into account the length of the serial line and the total consumption of the connected devices.

Line balancing - If the console is the last device connected on the serial line, a 150Ω resistor must be connected in parallel to terminals A and B.

Terminal block			Note
1	S	Input audio channel	Vocal
2	B	Channel B Serial Bus	Serial data
3	A	Channel A Serial Bus	Serial data
4	-	Negative power supply voltage for Serial Bus	-
5	+	Positive power supply voltage for Serial Bus	+12V DC

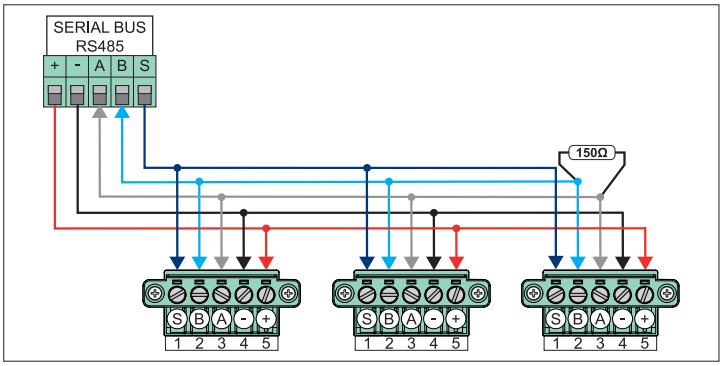

3 - ADDRESS PROGRAMMING

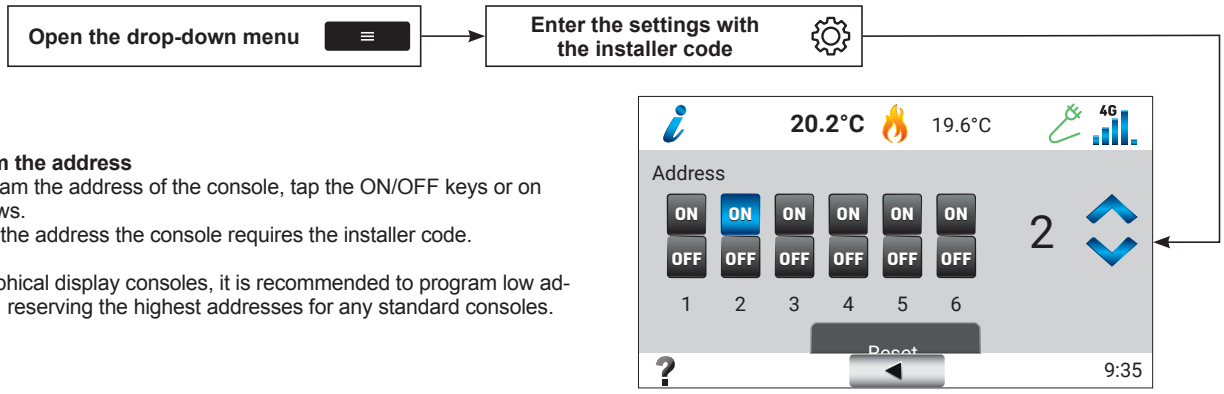

Program the address
To program the address of the console, tap the ON/OFF keys or on the arrows.
To save the address the console requires the installer code.
Note
For Graphical display consoles, it is recommended to program low addresses, reserving the highest addresses for any standard consoles.

4 - ENABLING THE GRAPHIC DISPLAY

The “Graphic display” can be enabled with the Centro program, from the console programming screen.

14 - Graphic display

Or the “Graphic display” can be enabled directly from the console, with the following procedure.

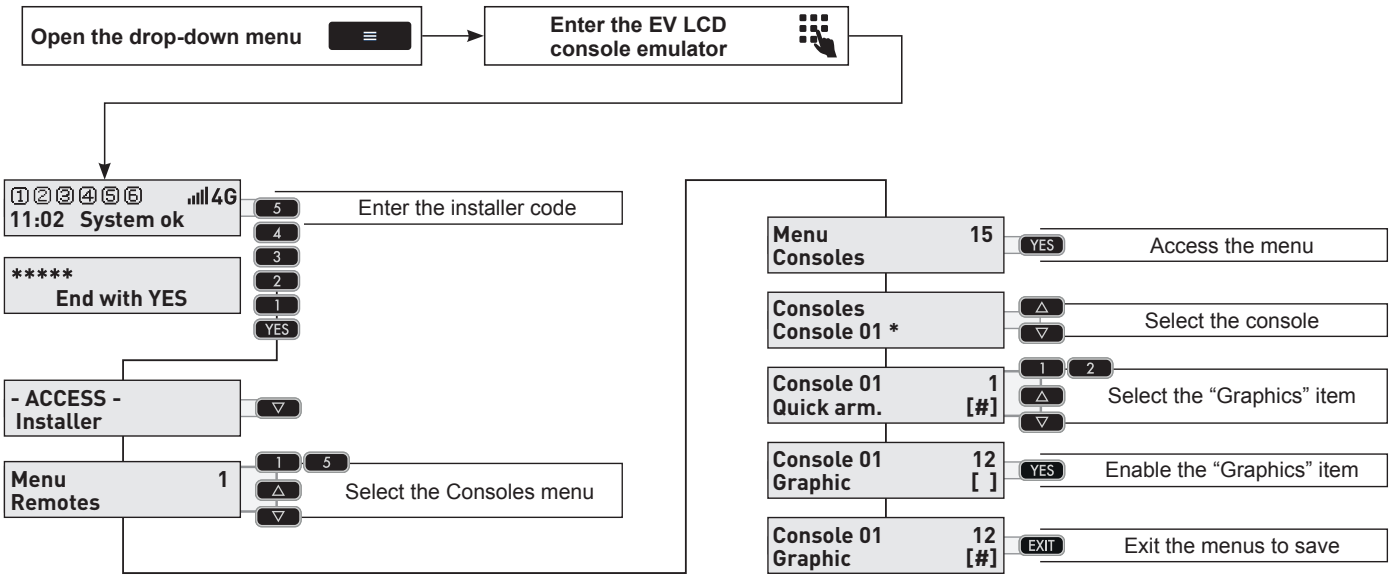

5 - GENERAL CONSOLE STATUS ICONS

The table lists the functional states in which the normal operation of the console is interrupted. In some states it is still possible to open the dropdown menu and access the allowed functions.	
	No serial communication Contact your installer.
	Active console fault. Contact your installer. In this condition, no function can be accessed.
	Synchronisation is in progress. Wait for synchronisation to end.
	Wrong code or key. Wait for the console to unlock before logging in again.
	Control panel in maintenance. The System is under maintenance, it is possible to operate only on the console from which it was accessed via installer code.

6 - PROGRAM STATUS SIGNALING

EV 430 PROX console
Panel A - The status of the programs is shown in the centre of the display by six icons that change colour depending on the program status.

PROGRAM STATUS ICONS			
	Grey Program not inserted	Blink	**Flashing yellow** Program being inserted/partial
	Yellow Program Inserted		**Red** Alarm in memory
Blink	**Yellow and flashing red** Program inserted Alarm in progress		**Yellow and red** Program inserted Alarm in memory
Blink Blink	**Flashing yellow and red** Partial program Alarm in progress	Blink	**Red and flashing yellow** Program being inserted/partial with Alarm in memory
Blink - Indicates the colour of the flashing			

7 - USER MANAGEMENT

The EV 430 PROX console lets you manage the operating programs of the System, interact with the remote controls and thermostats, and access the consultation and programming menus of the System reserved for the user.
In standby the console displays the time, date and temperatures in a low light, touch the display to access console information and functions.
System information and functions are displayed with icons in three areas, which can be seen in boxes **A, B, C.**
The console comes with an integrated RFID key reader; keys allow you to insert, disconnect and make partial System programs.

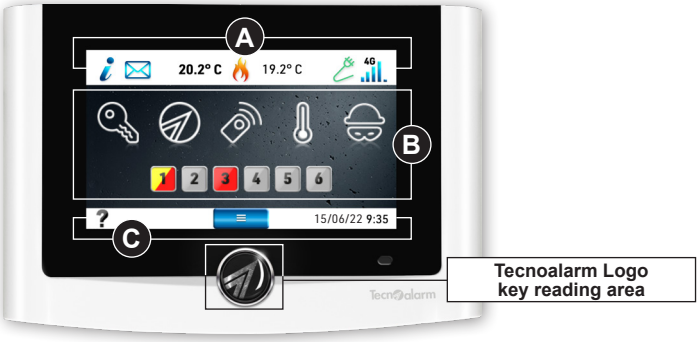

BOX A		
Default / Alert		**Information on System status.** Tap to enter the page that displays System information. - The page displays the detail icons and, if programmed by the installer, the splash info message. - When there is new information, the Alert icon replaces the Default icon.
		DETAIL ICONS Notifications can be filtered by selecting and deselecting detail icons. Zone alarm status · Tamper alarm · Anomalies / Faults Status · Isolated zones and/or devices
		Information messages. The icon shows there is a message (if programmed by the installer). Tap the icon to view the message.
20.2°C		**Thermostat associated with the console.** The icon indicates the temperature detected by the climate sensor associated with the console and the status of the thermostat.
		THERMOSTAT STATUS ICONS Thermostat: off (operation deactivated) Thermostat: on Mode: Winter Control Output: ON Thermostat: on Mode: Winter Control Output: OFF Thermostat: on Mode: Summer Control Output: ON Thermostat: on Mode: Summer Control Output: OFF Thermostat: on Mode: Anti-freeze Control Output: ON Thermostat: on Mode: Anti-freeze Control Output: OFF Thermostat in block
19.6° C		**Thermostat not associated with the console.** The icon displays the temperature detected by the climate sensor not associated with the console.
		Mains power. The icon indicates the status of the mains power.
		MAINS POWER STATUS ICONS Presence of mains power 230V AC. No mains power 230V AC.
4G		**GSM Phone module information** The icon indicates the mobile signal strength and network used. Tap the icon to display details on the phone module.

BOX B	
	Arming / disarming programs. Tap to display the program management keys. Insert or disable with option A or B **A - Arming / disarming.** To insert or disable tap the program key. The console prompts you to type the code or recognise the key. **B - Quick arming / disarming.** The feature must be enabled by the installer. To insert or disable tap the program key. In this case the console does not prompt you to type the code or recognise the key.
	Displays the status of the zones associated with the programs. - Tap to display the program keys. - Tap the program key to view the status of the associated zones.
	Activation /deactivation of remote controls. Tap to view the remote controls. Activate or deactivate with option A or B. **A - Activation/deactivation.** To activate or deactivate the remote control, tap the key. The console prompts you to type the code or recognise the key. **B - Quick activation/deactivation.** The feature must be enabled by the installer. To activate or deactivate the remote control, tap the key. In this case the console does not prompt you to type the code or recognise the key.

REMOTE CONTROL STATUS ICONS			
	Grey		**Yellow**
	Remote Control disabled		Remote Control enabled

	Programming thermostats. Tap to view the System thermostats. Enter with option A or B. **A - Thermostat menu.** To access the menu, touch the thermostat key. The console asks you to type the code. **B - Quick thermostat menu.** To access the menu, touch the thermostat key. The console does not ask you to type the code.
	Panic alarm. To activate the panic alarm, press the icon for 2 seconds. The panic alarm function must be programmed by the installer.

BOX C	
?	**Contextual help.** Tap to enable contextual help mode. Tap the icon to view its function. To exit the mode, tap the contextual help icon.
	Abort announcement. Tap to stop the voice announcement.
15/06/22 09:35	**Date and time.** Field that displays the date and time.

DROP-DOWN MENU	
	Zone status. Tap to view the list and statuses of system zones.

ZONE STATUS ICONS							
Zone statuses can be filtered by selecting and deselecting the detail icons.							
	Closed zone		Open zone		Isolated zone		Tampered zone
	Survival zone		Fault zone		Masking zone		Low battery zone
	Power supply status at 230V AC absent zone						

	Erasing the memory. To clear the alarm memory, touch the icon and confirm by typing code.
	EV LCD console emulation. Tap to enter EV LCD console emulation mode. The emulation allows you to perform the operations (see emulation table) that can be performed with the EV LCD console.
	Settings. To access the settings menu, tap the icon and log in by typing code or recognising the key. The menu allows you to change the following parameters: volume of voice announcements, level and mode of backlighting, screen saver and graphic theme.

EMULATION TABLE	
The table lists the paragraphs that describe the operations that can be performed in emulation mode of the EV LCD console	
3-3.2	General arming and disarming (direct)
3-3.3	Quick arming and disarming (alternative mode only)
3-3.6	Remote Control Management
3-3.7	Consultation of the event log
3-3.8	Consultation of Open zones
3-3.9	Hold-up alarm act
3-3.11	Consultation of the Alarm memory
3-3.12	Clearing the Alarm memory
3-3.13	Master code operation
4	Thermostats

VIDEOTUTORIAL

8 - EV 430 PROX FIRMWARE UPDATE

The procedure allows you to update the firmware of the EV 430 PROX Console.
The console display is always off during the procedure
N.B. before proceeding, download the update file available on the website www.tecnoalarm.com.
To start the procedure, open the Centro program.

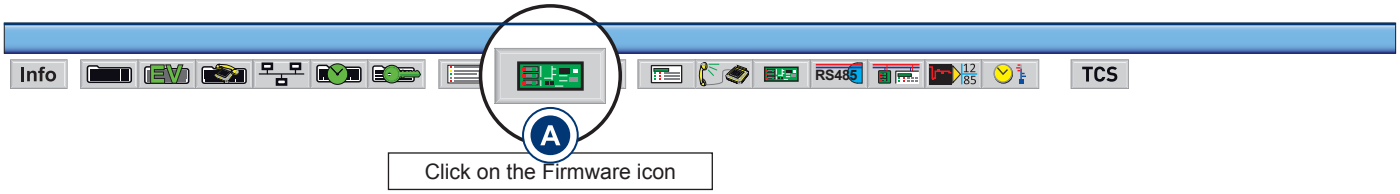

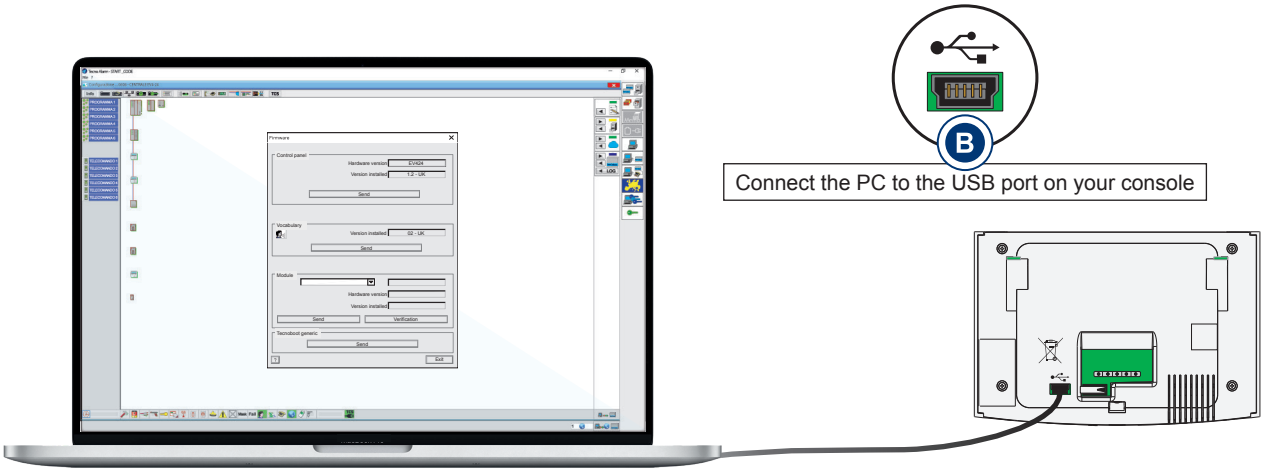

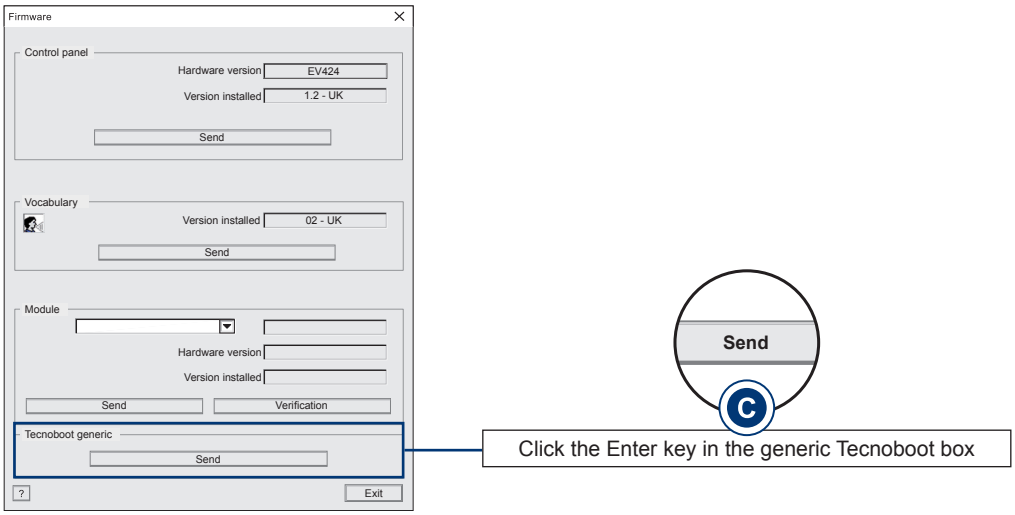

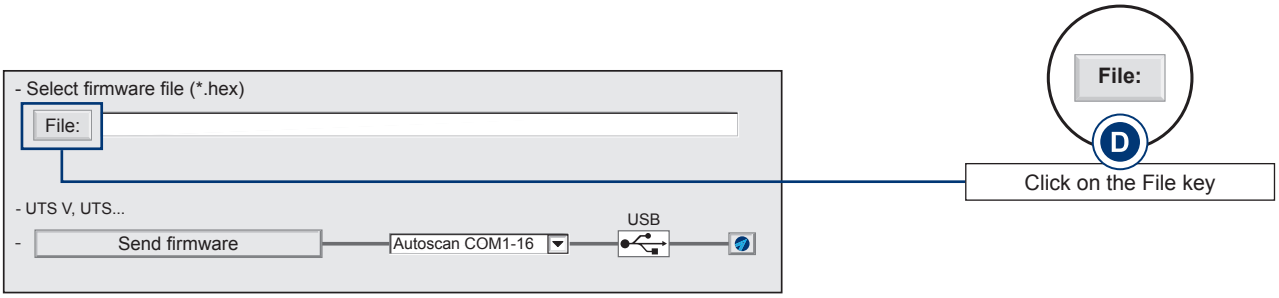

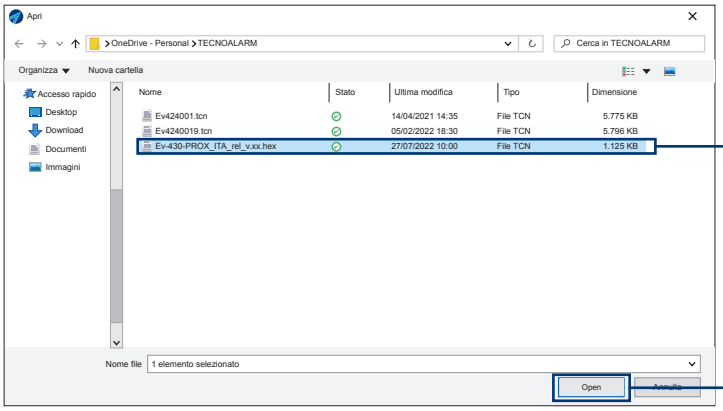

Select the firmware update file

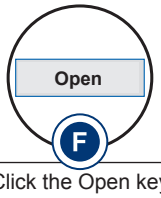

Click the Open key

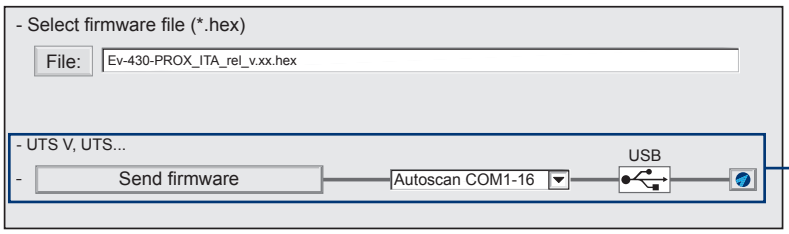

Locate the USB box and click the Enter Firmware key

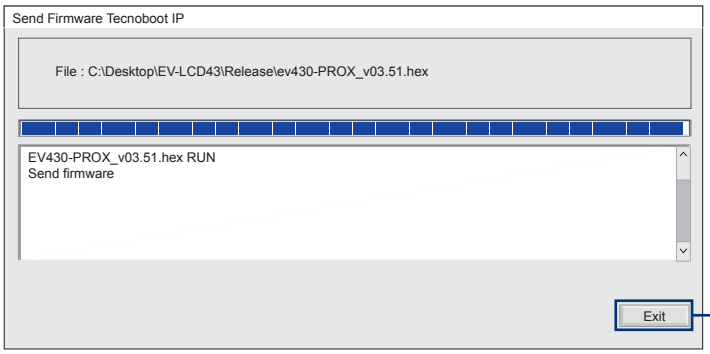

Wait for the procedure to complete and click on the Exit key

EV 430 PROX - COMPATIBILITY TABLE

Program Centro	Control panel firmware
Centro 6.0	FW 1.5.00 >

Product characteristics may be subject to change without notice.

Tecnoalarm
Via Ciriè 38 - 10099 San Mauro T.se
Torino (Italy) - Tel. +39 011 22 35 410
info@tecnoalarm.com - www.tecnoalarm.com

MADE IN ITALY

ISO 9001