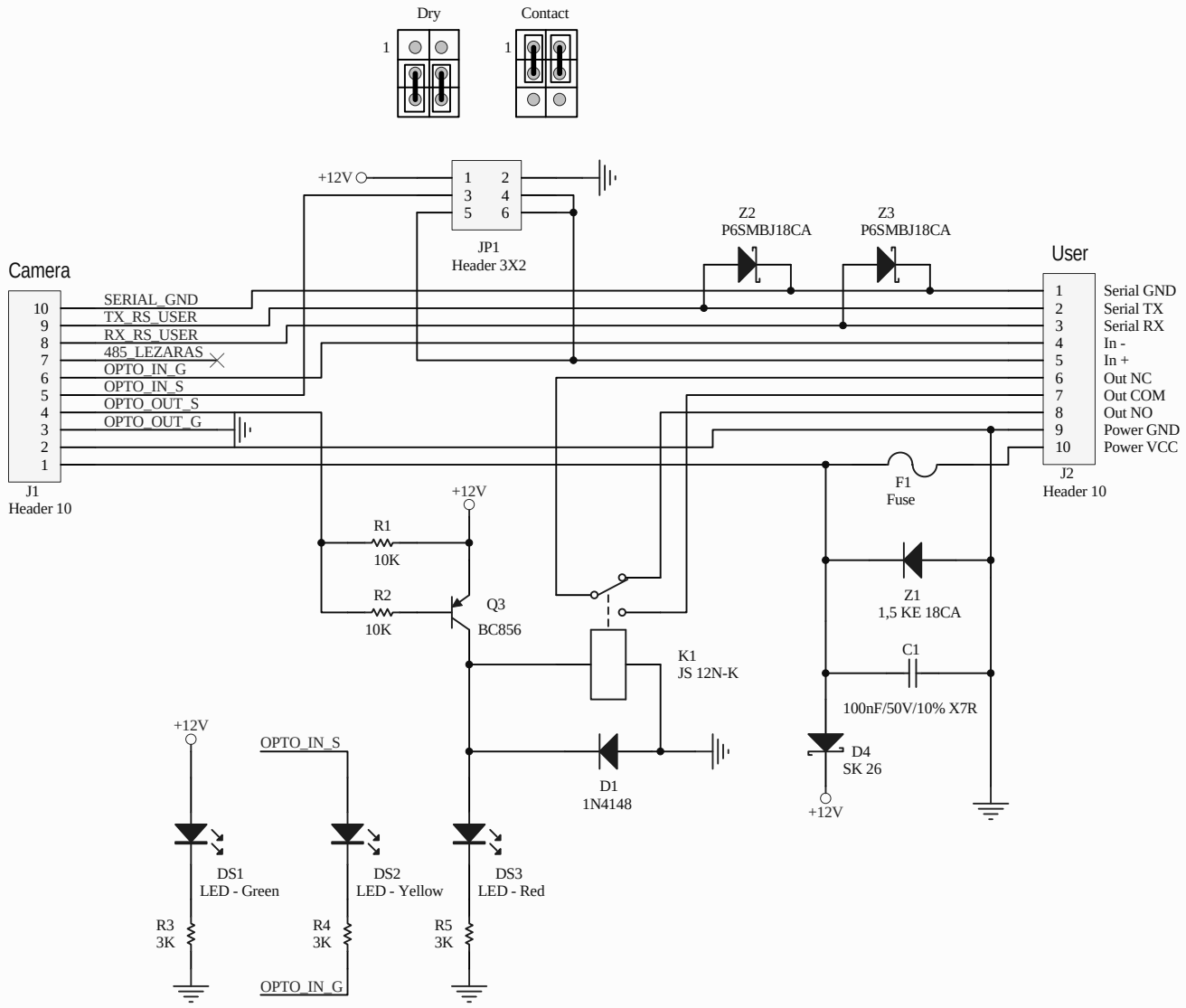

Title	ParkIT Connection Box	
Size A4	Number	Revision V.1.0
Date: 2011.09.12.		Sheet1 of 1
File: F:\TT\..\ParkIT_kötödoboz.SchDoc		Drawn By: